Technical data sheet

Product features

Salamander manual 2 heating elements fixed grid 400 V / 3N		
Model	**SAP Code**	00003929
SE 70 S	**A group of articles - web**	Salamanders



- Removable rear wall of the device: Yes
- Width of internal part [mm]: 710
- Depth of internal part [mm]: 310
- Number of grid positions: 3

SAP Code	00003929	**Net Weight [kg]**	18.00
Net Width [mm]	884	**Power electric [kW]**	4.400
Net Depth [mm]	369	**Loading**	400 V / 3N - 50 Hz
Net Height [mm]	378		

RM GASTRO, s.r.o.,
Třída Čs. armády 816,
391 81 Veselí nad Lužnicí 1, ID:49825062

Technical data sheet

Technical drawing

Salamander manual 2 heating elements fixed grid 400 V / 3N		
Model	**SAP Code**	00003929
SE 70 S	**A group of articles - web**	Salamanders

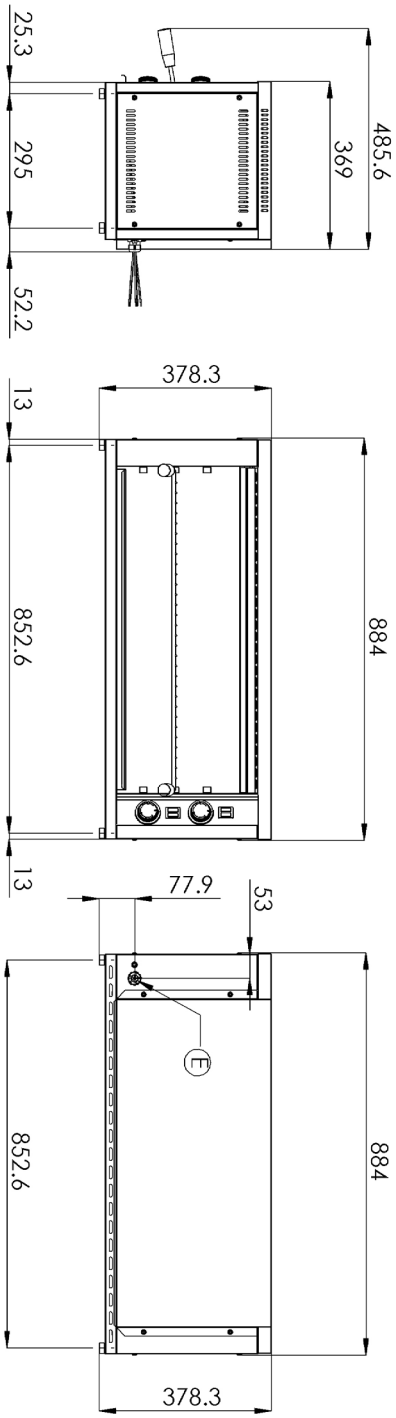

RM GASTRO, s.r.o.,
Třída Čs. armády 816,
391 81 Veselí nad Lužnicí 1, ID:49825062

Technical data sheet

Technical parameters

Salamander manual 2 heating elements fixed grid 400 V / 3N		
Model	**SAP Code**	00003929
SE 70 S	**A group of articles - web**	Salamanders

1. **SAP Code:**
   00003929
2. **Net Width [mm]:**
   884
3. **Net Depth [mm]:**
   369
4. **Net Height [mm]:**
   378
5. **Net Weight [kg]:**
   18.00
6. **Gross Width [mm]:**
   520
7. **Gross depth [mm]:**
   920
8. **Gross Height [mm]:**
   440
9. **Gross Weight [kg]:**
   21.00
10. **Device type:**
    Electric unit
11. **Material:**
    Stainless steel
12. **Power electric [kW]:**
    4.400
13. **Loading:**
    400 V / 3N - 50 Hz
14. **Control type:**
    Mechanical
15. **Number of grid positions:**
    3
16. **Protection of controls:**
    IPX4
17. **Number of power control stages:**
    3
18. **Number of internal parts:**
    3
19. **Removable rear wall of the device:**
    Yes
20. **Width of internal part [mm]:**
    710
21. **Depth of internal part [mm]:**
    310
22. **Cross-section of conductors CU [mm²]:**
    1

RM GASTRO, s.r.o.,
Třída Čs. armády 816,
391 81 Veselí nad Lužnicí 1, ID:49825062